GIANT BY TOBROCO

G2200E
G2200E X-TRA

ELECTRIC

- LITHIUM-ION BATTERIES
- ZERO EMISSION
- HIGH PERFORMANCE
- LOW NOISE
- ENERGY RECUPERATION

	G2200E	G2200E X-TRA
Engines	Driving mechanism 6.5 kW Working hydraulics 12 kW	Driving mechanism 6.5 kW Working hydraulics 12 kW
Battery	Li-ion 250Ah / 48 V	Li-ion 250Ah / 48 V
Service weight	4,850 lbs.	4,850 lbs.
Lifting height	111.2 in.	96.5 in.
Tipping load	3,200 lbs.	4,530 lbs.
Working hydraulics	9.2 GPM	9.2 GPM
Max. speed	11.2 mp/h	11.2 mp/h

GIANT BY TOBROCO

WWW.TOBROCO-GIANT.US

TECHNICAL SPECIFICATIONS

Dimensions

	G2200E	G2200E X-TRA
A	59.6 in.	62.2 in.
B	117.1 in.	120.2 in.
C	145.3 in.	150.8 in.
D	24.5 in.	24.5 in.
E	5.3 in.	5.3 in.
F	31.4 in.	31.4 in.
G	49.4 in.	49.4 in.
H	90.6 in.	90.6 in.
I	89.9 in.	89.9 in.
J	58.3 in.	49.2 in.
K	78.3 in.	66.1 in.
L	111.2 in.	96.5 in.
M	133.5 in.	119.7 in.
N	43°	41°
O	53°	46°
P	47°	37°
Q	29°	29°
R	Ø 29.9 in.	Ø 29.9 in.
1A	102.3 in.	104.3 in.
1B	90.2 in.	92.2 in.
1C	46.4 in.	48.4 in.
1D	42.5 in.	42.5 in.

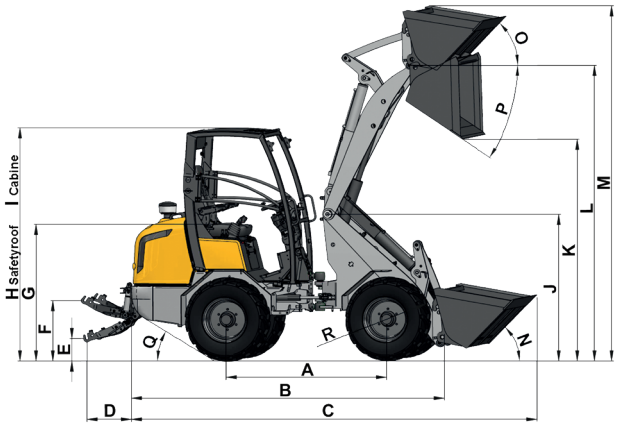

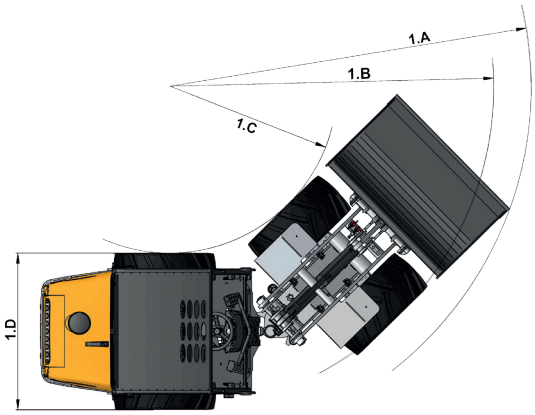

Tipping loads

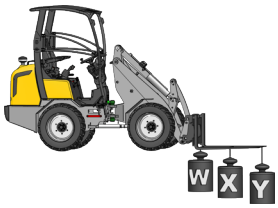

	G2200E	G2200E X-TRA
S	3,197 lbs	4,054 lbs
T	2,756 lbs	3,483 lbs
U	2,094 lbs	2,513 lbs
V	1,642 lbs	1,874 lbs
W	4,409 lbs	5,897 lbs
X	2,800 lbs	3,505 lbs
Y	2,205 lbs	2,469 lbs

TOBROCO-GIANT reserves the right to make changes in specifications at any time without notice or obligation.

GIANT® BY TOBROCO

TOBROCO-GIANT USA
725 Ida Street, Cedar Falls
IA 50613, USA
Tel.: +1 319-449-3677
Fax.: +1 319-449-3738

Internet: www.tobroco-giant.us
E-Mail: info@tobroco-giant.us